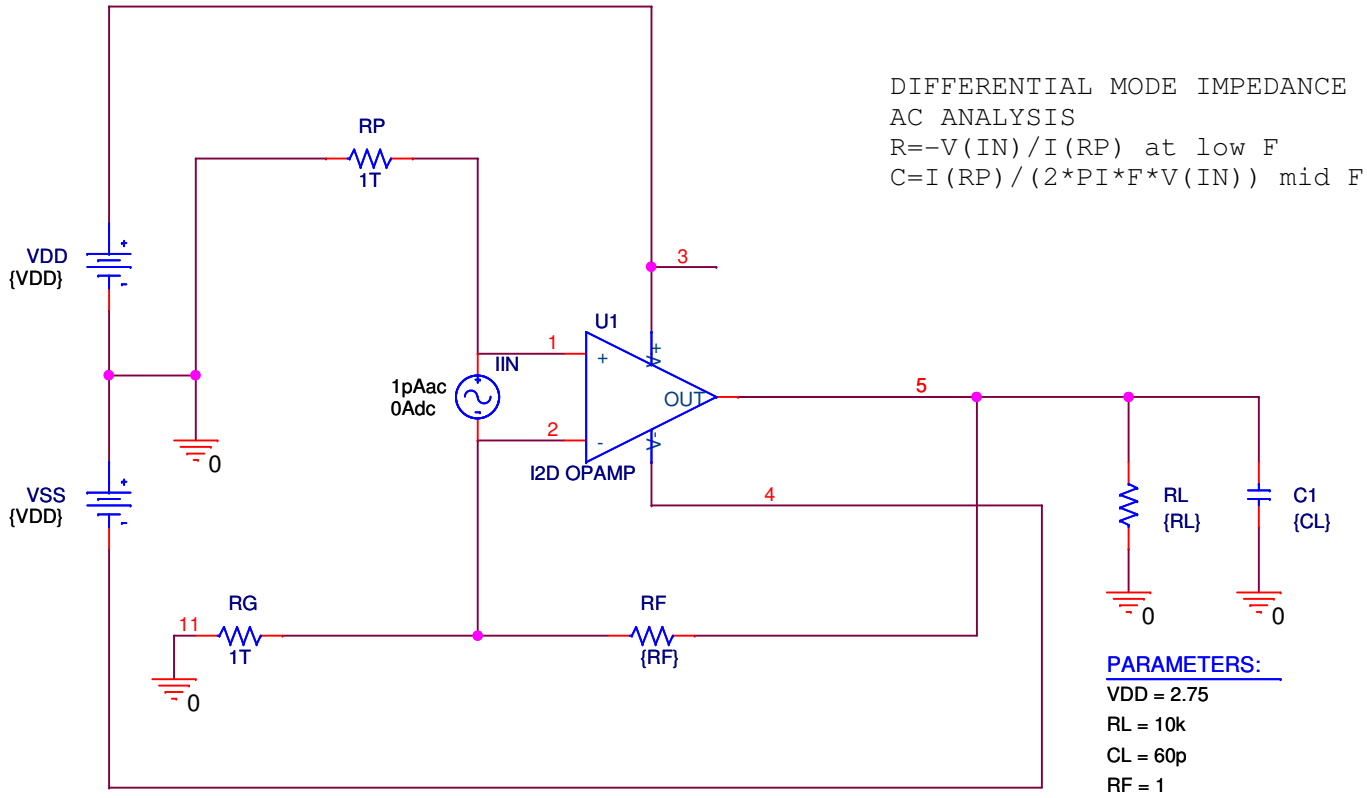
DIFFERENTIAL MODE IMPEDANCE
AC ANALYSIS
R=-V(IN)/I(RP) at low F
C=I(RP)/(2*PI*F*V(IN)) mid F
RP
1T
VDD
{VDD}
VSS
{VDD}
0
3
U1
1
IIN
1pAac
0Adc
2
OUT
I2D OPAMP
5
4
RL
{RL}
C1
{CL}
0
0
RG
11
1T
0
RF
{RF}
PARAMETERS:
VDD = 2.75
RL = 10k
CL = 60p
RF = 1