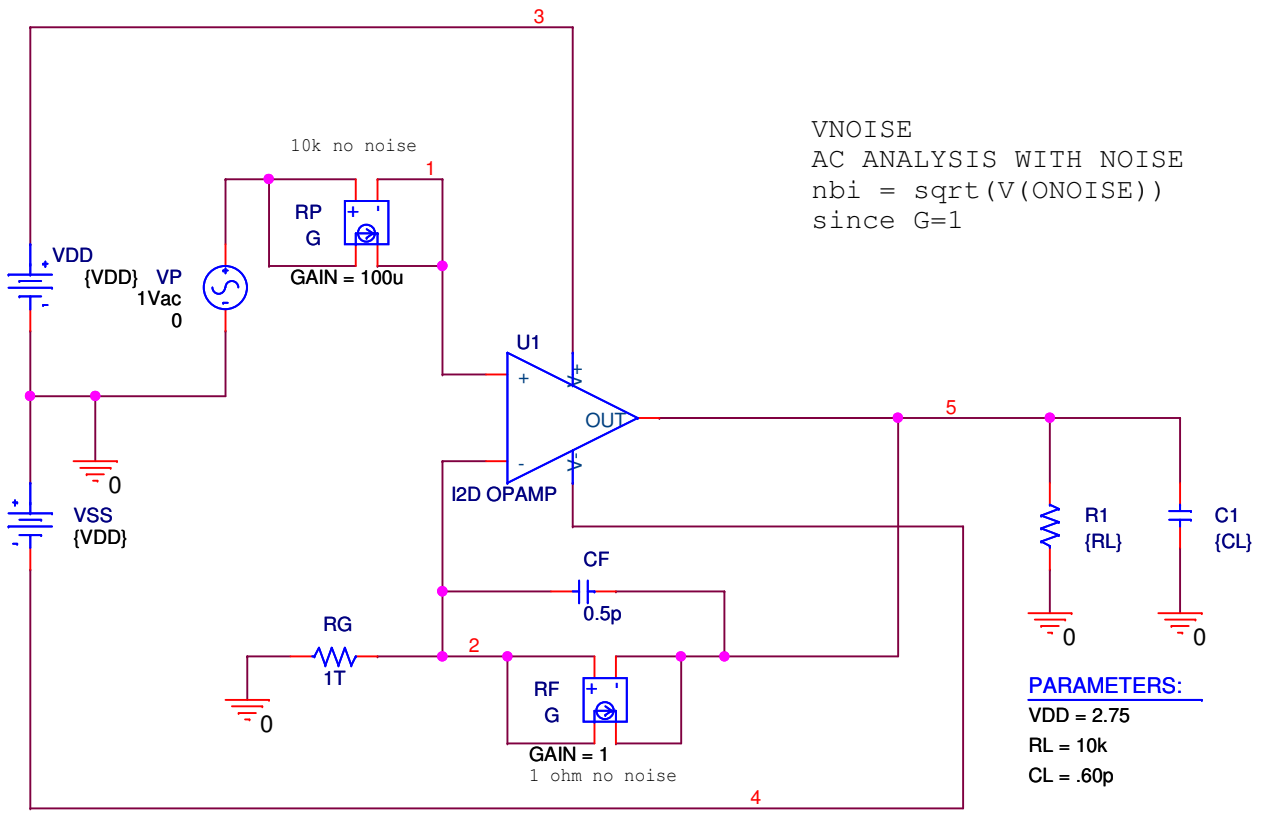

VNOISE
AC ANALYSIS WITH NOISE
nbi = sqrt(V(ONOISE))
since G=1