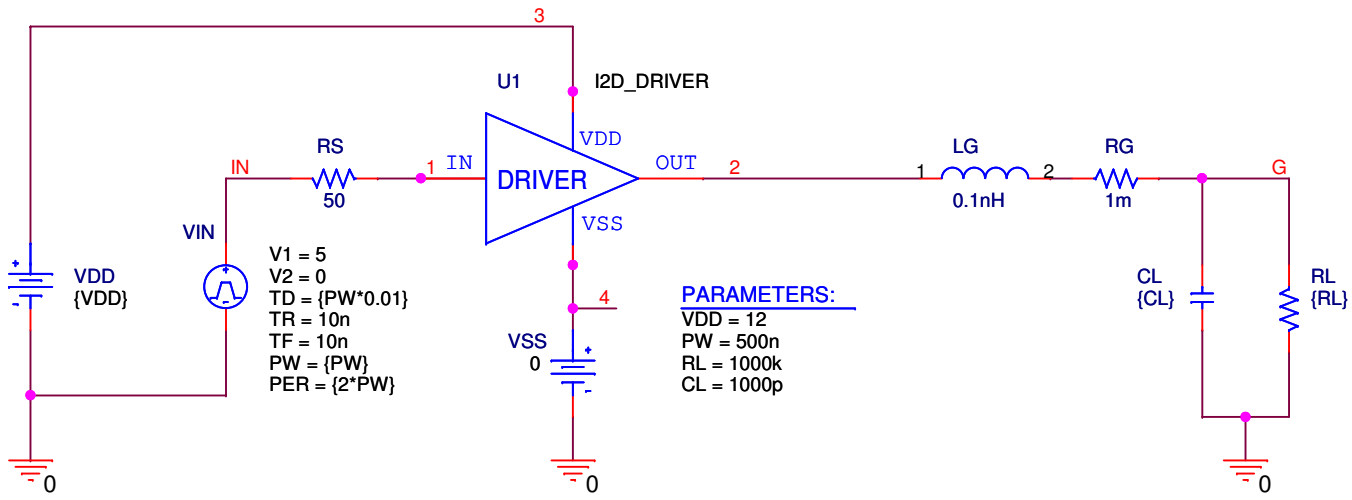


```
Trise, Tfall, Trisdelay, Tfalldelay vs temperature at VDD=12V
Repeat at -40C to 150C in 10C steps.
Risetime_NoOvershoot(v(g))
Falltime_NoOvershoot(v(g))
XatNthY_PercentYRange(v(g),90,1)-XatNthY_PercentYRange(v(in),10,1)
XatNthY_PercentYRange(v(g),10,2)-XatNthY_PercentYRange(v(in),90,2)
When overshoot exists, parametric measurements not correct
```

Title	11_Tr_vs_Vdd	
Size A	Document Number Driver Test Circuit	Rev 0
Date: Sunday, October 25, 2009	Sheet 1 of 1	